NIH Public Access
Author Manuscript
Mol Cell Endocrinol. Author manuscript; available in PMC 2011 January 27.

Published in final edited form as:
Mol Cell Endocrinol. 2010 January 27; 314(2): 221. doi:10.1016/j.mce.2009.05.005.

PARTICIPATION OF SIGNALING PATHWAYS IN THE DEREPRESSION OF LUTEINIZING HORMONE RECEPTOR TRANSCRIPTION

Maria L. Dufau[*], **Mingjuan Liao**, and **Ying Zhang**
Section on Molecular Endocrinology, Program in Developmental Endocrinology and Genetics, *Eunice Kennedy Shriver* National Institute of Child Health and Human Development, National Institutes of Health, Bethesda, Maryland. 20892-4510

Abstract

The luteinizing hormone receptor (LHR) transcription is subject to an epigenetic regulatory mode whereby the proximal Sp1 site acts as an anchor to recruit histone deacetylases (HDAC)1/2 and the Sin3A co-repressor complex. This results in promoter-localized histone hypoacetylation that contributes to the silencing of LHR transcriptional expression. Chromatin changes resulting from site-specific acetylation and methylation of histones regulate LHR gene expression. The HDAC inhibitor TSA induced cell-specific phosphatase release from the promoter, which serves as an 'on' mechanism for Sp1 phosphorylation by phosphatidylinositol 3-kinase /protein kinase Cζ (PI3K/PKCζ) at Ser641, leading to p107 repressor derecruitment and LHR transcriptional activation. The methylation status of the promoter provides another layer of modulation in a cell-specific manner. Maximal derepression of the LHR gene is dependent on complete DNA demethylation of the promoter in conjunction with histone hyperacetylation and release of repressors (p107 and HDAC/Sin3A). Independently, the PKC-α/Erk pathway, participates in LHR gene expression through induction of Sp1 phosphorylation at Ser site(s) other than Ser641. This causes dissociation of the HDAC1/mSin3A from the promoter, recruitment of TFIIB and Pol II, and transcriptional activation. Collectively, these findings demonstrate that LHR gene expression at the transcriptional level is regulated by complex and diverse networks, in which coordination and interactions between these regulatory effectors are crucial for silencing/activation of LHR expression.

Keywords

Luteinizing Hormone Receptor; transcription; epigenetic; repressor; co-repressor; histone deacetylase; histone acetylation; DNA methylation; Sp1; PKC phosphorylation; phosphatases

INTRODUCTION

The luteinizing hormone receptor (LHR) is a G-protein coupled receptor that has an essential role in gonadal maturation and function. The LHR gene is expressed primarily in the gonads, where it mediates the luteinizing hormone (LH) signals that regulate cyclic ovarian changes and testicular function (Dufau, 1998; Richards and Hedin, 1988; Richards et al., 1995; Dufau

*To whom correspondence should be addressed: NIH, Bldg. 49 Rm 6A-36, Bethesda, MD 20892-4510 Email:dufaum@mail.nih.gov.

Publisher's Disclaimer: This is a PDF file of an unedited manuscript that has been accepted for publication. As a service to our customers we are providing this early version of the manuscript. The manuscript will undergo copyediting, typesetting, and review of the resulting proof before it is published in its final citable form. Please note that during the production process errors may be discovered which could affect the content, and all legal disclaimers that apply to the journal pertain.

NIH-PA Author Manuscript
NIH-PA Author Manuscript
NIH-PA Author Manuscript

NIH-PA Author Manuscript

NIH-PA Author Manuscript

NIH-PA Author Manuscript

and Tsai-Morris, 2007). The LHR is also found in non-gonadal, tumoral tissues and cancer cells (Reshef et al., 1990; Lei et al., 1993; Toth et al., 1994; Reiter et al., 1995; Lojun et al., 1997; Meduri et al., 1997; Carlson et al., 2004). In the ovary, LH/LHR interaction promotes the formation of preovulatory follicles and corpora lutea, and enhances steroidogenesis in granulosa and luteal cells. In the Leydig cells, LH action supports steroidogenic enzymes and other functions to regulate androgen production which is essential for the completion of spermatogenesis (Dufau, 1998; Dufau and Tsai-Morris, 2007). LHR coupling functions are exerted primarily through cAMP/protein kinase A-mediated events in the gonads (Dufau et al., 1977; Catt et al., 1980). Also through this signaling pathway, the LHR mediates LH induced transcription of several EGF-like factors and metalloproteases in granulosa cells. These factors, which activate the EGF receptor and ERK/MAP signaling in cumulus cells, are responsible for the paracrine actions of LH in the ovary (Hsieh and Conti, 2005) and might also regulate LHR receptor expression in granulosa, thecal and Leydig cells in an autocrine fashion. The EGF type growth factor, epiregulin, is transcriptionally regulated by FSH through an Sp1/CT box promoter-directed activation in granulosa cells (Sekiguchi et al., 2002). In addition, LH and FSH acting through cAMP/PKA mediated events, could directly regulate LHR transcription in target cells (Chen et al., 2000; Chen et al., 2001). The phosphoinositide signaling pathway is also operative and LH activation of the LHR promotes PI hydrolysis and calcium signaling (Herrlich et al., 1996; Kosugi et al., 1996). Several hormones have been shown to affect LHR expression in the gonads, including FSH, prolactin, growth hormone and IGF-I (Dufau and Tsai-Morris, 2007; Richards et al., 1995). More recently, Akt and Erk pathways have been shown to mediate the actions of FSH and IGF on granulosa cells and of LH on theca cells *in vitro*, and to participate in follicle growth and estradiol secretion *in vivo* (Ryan et al., 2008). However, their intrinsic molecular regulatory mechanisms in LHR transcription have not been elucidated.

The cDNA of the LHR was cloned from pig and mouse testes, rat and human libraries (Loosfelt et al., 1989; McFarland et al., 1989; Minegishi et al., 1990; Gudermann et al., 1992) and encodes a 75 kDa protein that contains 675 amino acids. The receptor is a sialoglycoprotein that contains two functional units: the extracellular domain that binds LH and hCG with high affinity and the seven-transmembrane region with connecting extracellular/cytoplasmic loops and cytoplasmic modules that participate in signaling, internalization and recycling events. The LHR is encoded by a single copy gene whose structure is highly conserved between species. It contains 11 exons and 10 introns - exons 1–10 encode most of the extracellular domain (EC) and exon 11 for the rest, including 43 aa of the EC. The structure of the LHR gene was elucidated in the rat, human and mouse, and is highly conserved between species (Tsai-Morris et al., 1990; Tsai-Morris et al., 1991; Koo et al., 1991; Huhtaniemi et al., 1992; Dufau et al., 1995). Subsequently, significant advances in the control of LHR transcription have been derived from studies of the human gene (hLHR) in cancer cells in culture (Zhang and Dufau, 2002; Zhang et al., 2005; Zhang et al., 2006; Zhang et al., 2008; Liao et al., 2008). These studies have revealed that transcription of the LHR gene is subject to repression and derepression through various modalities of complex modulation at the epigenetic level, and the participation of phosphatases, signal transduction pathways, phosphorylation events and derecruitment of inhibitors.

The LHR gene 5’ flanking region, promoter structure and orphan receptors regulatory function

The identification of the LHR gene promoter in different species and the various transcription factors that are involved in its basal transcription have facilitated the characterization of regulatory mechanisms that participate in LHR transcription. The human LHR gene is TATA-less and its GC-rich promoter is 176 bp 5’ to the ATG codon in the rat and human receptors in gonadal and non-gonadal tissues (Tsai-Morris et al., 1991; Wang et al., 1992; Tsai-Morris

NIH-PA Author Manuscript

NIH-PA Author Manuscript

NIH-PA Author Manuscript

et al., 1993; Tsai-Morris et al., 1994; Ji et al., 1994; Tsai-Morris et al., 1995; Dufau et al., 1995; Geng et al., 1999) (Fig. 1). Initiator-like elements encompass the transcriptional start sites, which are located within the promoter close to the translational initiation site (ATG). The LHR promoter is driven by two functional Sp1 sites (I) and (II) in the human gene at −79 and −119 bp (from initiation of translation), respectively (Geng et al., 1999; Tsai-Morris et al., 1991; Tsai-Morris et al., 1995; Tsai-Morris et al., 1993). These sites that bind transcription factors Sp1 and Sp3 contribute similarly to LHR basal promoter activity and are of central importance in transcription of the LHR gene. The GC-rich Sp1 DNA binding Sp1 domains, and in particular the proximal Sp1 site, may operate as a Sp1/Initiator-directed transcriptional complex. Furthermore, the promoter contains three GC-rich Ap-2 elements that are silent in the human LHR promoter. Upstream of the Sp1 sites is present an inhibitory imperfect estrogen receptor response element direct repeat (DR) with no spacing, that binds nuclear orphan receptors EAR2 and EAR3/COUP-TFI (Zhang and Dufau, 2000; Zhang and Dufau, 2001; Zhang and Dufau, 2003; Zhang and Dufau, 2004). The orphan receptor-induced inhibition of rat and human LHR gene transcription results from the interaction between EAR3/COUP-TFI bound to DR and Sp1 bound to the proximal Sp1-(I) site. These orphan receptors specifically perturb the association of Sp1 with TFIIB of the preintiation complex, resulting in reduced recruitment of RNA Pol II to the promoter and impaired transcription (Zhang and Dufau, 2000; Zhang and Dufau, 2003). Orphan receptors are subject to regulation of their expression by LH/hCG, which is translated in repressive and inductive states of LHR expression in granulosa cells of early rat follicles (repressive) and those of mid-to late follicles and luteal cells (derepressed), respectively. This type of modulation is independent of changes in histone acetylation status. In contrast, orphan receptor TR4, acts as an activator of human LHR transcription through the same DR responsive element, and is not operative in the rat due to a single base-pair mismatch in the DR (Zhang and Dufau, 2000; Zhang and Dufau, 2001; Zhang and Dufau, 2003). These findings are relevant to the control of hLHR gene transcription by these orphan receptors during the ovarian cycle.

In various cell types examined, the rat LHR gene is silenced by upstream sequences to the promoter, while only minor inhibition was observed in the human (15–20%). This could be due to specific regulatory proteins related to sequence differences in the 5’flanking regions of different species.

Epigenetic control of LHR transcription

The hLHR gene is subject to epigenetic regulation whereby local chromatin changes at the LHR gene promoter are critical for repression/derepression of LHR transcription. This type of control is independent of the pathway involving unliganded nuclear receptors (see above). Comparative studies of tumor cells in culture, including JAR (human choriocarcinoma) and MCF7 (human mammary gland carcinoma) cells which harbor the LHR gene in a repressed state and PLC cells with derepressed LHR (Simian virus-40 transformed-human placental cells) have provided seminal information about epigenetic participation and its impact in subsequent repression/depression events (Fig.2A). Inhibition of histone deacetylases (HDACs) by trichostatin A (TSA) caused significant but less marked induction of hLHR transcription in JAR cells (40-fold) than MCF7 cells (175-fold) while PLC cells, which possess the acetylated H3/H4 histone code of the activated state and non-methylated DNA at the promoter in their native state were fully derepressed in the absence of TSA treatment (Zhang et al., 2005). A similar differential derepression pattern was observed for LHR mRNA expression (Fig. 2 B). The TSA derepressive effect is operative at the LHR promoter, which is fully methylated in JAR cells and lightly methylated in MCF7 cells, by switching the histone code to the activated state. An additional increase up to 130–160 fold, close to the levels observed in MCF-7 treated with TSA alone, was observed upon demethylation of the promoter by the DNA methylation inhibitor, 5-azacytidine (5-AzaC) in JAR cells. The co-requirement of TSA and 5-AzaC, but

NIH-PA Author Manuscript

NIH-PA Author Manuscript

NIH-PA Author Manuscript

not 5AzaC alone, for demethylation of the promoter indicates the essential participation of chromatin structure in this process (Zhang et al., 2005). Multiple site-specific lysine acetylation of histones H3/H4 is associated with LHR gene activation, and methylation or acetylation of H3 at K9 is present at the silenced and derepressed LHR gene, respectively (Fig. 2 C). Further acetylation of H3 at K14 and H4 at K12 and K16, and methylation at of H3 at K4, are also associated with derepression. Although DNA methylation levels do not affect the histone code of the LHR gene promoter, demethylation of the promoter CpG sites is necessary for maximal stimulation of this gene by TSA. These findings have indicated the requirement for coordinated changes in DNA methylation and histone modification of the LHR promoter.

Repressors of LHR transcription

The repressor HDAC/Sin3A complex associates specifically with Sp1 bound at the proximal Sp1 (I) and Sp3 also bound to this site on the hLHR promoter. This complex is composed of HDAC 1 and HDAC 2, which interact directly with Sp1 and indirectly with Sp3 through Rbp48 adaptor, and mSin3A is attached to the promoter through its interaction with HDACs. HDAC 1 and 2 were identified as repressors for the hLHR and Sin3A as a corepressor (Zhang and Dufau, 2002). p107, a close homologue of retinoblastoma protein (pRb), has been shown to associate with the Sp1 at the Sp1 (I) binding site, and is a potent repressor of LHR transcription (Zhang et al., 2006). TSA-induced histone hyperacetylation without changes in DNA methylation at the promoter, causes release of inhibitor p107 from Sp1 at the promoter and partial LHR derepression. Dissociation of HDAC/mSin3A and maximal derepression is observed upon promoter DNA demethylation by treatment with TSA in combination with 5-AzaC (Zhang et al., 2005; Zhang et al., 2006). Thus, demethylation of the LHR promoter reinforces the activation of LHR expression initiated by histone hyperacetylation in JAR cells by TSA. This two tiered derepression states of the LHR induced by TSA and AzaC are only observed in cells displaying basally hypoacetylated histones and highly DNA methylated promoters (JAR cells), while cells with DNA demethylated promoters revealed a single step derepression as is the case for MCF-7 cells. These changes induce a more permissive chromatin state which ultimately favours the recruitment of TFII B and Pol II to the promoter and stimulates Sp1-driven transcription. Protein phosphatases (PP1 and PP2A) also participate in LHR expression and exert repressor activity in a cell specific manner. PP1 or PP2A is associated with the silenced state of the LHR promoter through HDAC 1/2 or Sp1 in MCF7 or JAR cells, respectively (Zhang et al., 2008). These negatively regulate the LHR gene transcription by promoting a key dephosphorylation of Sp1 that it is necessary for transcriptional activation. (see below).

Participation of signaling events in transcription of the LHR

Derepression of LHR transcription induced by TSA is limited to changes in chromatin structure that are due to histone acetylation independent of the DNA methylation status. Such derepression requires the participation of the PI3Kinase-PKCζ pathway, which mediates site-specific phosphorylation of the Sp1 and accounts for LHR transcriptional activation induced by TSA in JAR and MCF7 cells (Zhang et al., 2006) (Fig.3 A–D). Upon HDAC inactivation by TSA these cells exhibit high levels of Sp1 phosphorylation at Ser 641, which is required for the release of p107 repressor from the LHR promoter (Fig.3C, E, F). Blockade of PI3K or PKCζ abolished Sp1 phosphorylation, the release of p107 repressor and the marked activation of LHR gene expression induced by TSA (Fig. 3A, B). PKCζ, the downstream effector of PI3-K, was found to associate with Sp1, and this association was enhanced by TSA. More recent studies have demonstrated the critical involvement of phosphoprotein-phosphatases PP2A and PP1 in derepression of the LHR gene by TSA through regulation of the Sp1 phosphorylation at Ser 641 (Zhang et al., 2008). The selective binding of the phosphatases to the LHR gene promoter in JAR and MCF-7 cells occur through their direct or indirect (through H1/H2)

NIH-PA Author Manuscript

NIH-PA Author Manuscript

NIH-PA Author Manuscript

association with Sp1, respectively (Fig. 4 A,B). These permit phosphatases to exert their regulatory effects on Sp1 phosphorylation levels that control silencing or activation of the LHR (Fig. 4C). Changes in chromatin structure induced by TSA caused cell-specific release of a phosphatase (PP2A in JAR cells, PP1 in MCF-7 cells) (Zhang et al., 2008) (Fig. 4D). This favors the phosphorylation of Sp1 mediated by the PI3K/PKCζ pathway (constitutively active in these cancer cells and with potential induction by hormones and/or other activators in gonadal target cells) which in turn causes release of the p107 inhibitor from Sp1, leading to recruitment of TFIIB and Pol II and consequently marked transcriptional activation of the hLHR.

PKCα/Erk signaling is also an important mechanism for the activation of LHR transcription. Increases in LHR promoter activity and of endogenous LHR transcripts are induced by activation of PKCα by phorbol-12-myristate-13-acetate (PMA) in Hela cells which express PKCα (Fig. 5A). The Erk pathway is the down-stream effector of PKCα activation (Fig. 5 B). PMA caused significant enhancement of Sp1 phosphorylation at serine site (Liao et al., 2008) (other than the Ser 641 targeted by PI3K-PKCζ) which was blocked by PKCα and Erk inhibitors (Fig. 5C). Sp1 is the direct target of activated Erk (pErk) which is recruited to the LHR promoter by endogenous PKCα activation. Following Sp1 phosphorylation, the HDAC/mSin3A repressor complex dissociated via HDAC1 release from Sp1 (Fig. 5 D), histone 3 is acetylated, transcription factor TFIIB and RNA polymerase II are recruited to the LHR promoter, and LHR transcription is increased (Fig. 5 E).

Conclusions

Significant advances have been achieved in studies of LHR gene structure and regulation of transcription. Investigations on the control of LHR transcription have revealed the importance of epigenetic changes associated with histone acetylation/methylation and the promoter methylation status, the participation of Ser/Thr phosphatases and of at least two independent signaling pathways, and the release of repressors and presumably recruitment of co-activators in the LHR transcriptional activation. These findings derived from studies on stable cultures of cancer cells have proven to be advantageous, since transient cultures of gonadal cells would permit only limited exploration of the basic aspects of transcription. These approaches, which facilitated the identification of several layers of regulatory modalities participating in the basic control of LHR gene expression and regulation, are applicable to studies of their participation in LHR transcriptional regulation during development by hormones, growth factors and other activators of target gonadal systems. Deviations in these mechanisms could also provide insights into unexplained disease states related to LHR expression.

Acknowledgments

This work was supported by the National Institutes of Health (Intramural Research Program of the NICHD).

References

Carlson HE, Kane P, Lei ZM, Li X, Rao CV. Presence of luteinizing hormone/human chorionic gonadotropin receptors in male breast tissues. J Clin Endocrinol Metab 2004;89:4119–4123. [PubMed: 15292356]

Catt KJ, Harwood JP, Clayton RN, Davies TF, Chan V, Katikineni M, Nozu K, Dufau ML. Regulation of peptide hormone receptors and gonadal steroidogenesis. Recent Prog Horm Res 1980;36:557–662. [PubMed: 6251521]

Chen S, Liu X, Segaloff DL. A novel cyclic adenosine 3',5'-monophosphate-responsive element involved in the transcriptional regulation of the lutropin receptor gene in granulosa cells. Mol Endocrinol 2000;14:1498–1508. [PubMed: 10976926]

NIH-PA Author Manuscript NIH-PA Author Manuscript NIH-PA Author Manuscript

Chen S, Liu X, Segaloff DL. Identification of an SAS (Sp1c adjacent site)-like element in the distal 5'-flanking region of the rat lutropin receptor gene essential for cyclic adenosine 3',5'-monophosphate responsiveness. Endocrinology 2001;142:2013–2021. [PubMed: 11316768]

Dufau ML. The luteinizing hormone receptor. Annu Rev Physiol 1998;60:461–496. [PubMed: 9558473]

Dufau, ML.; Tsai-Morris, C-H. The Leydig Cell in Health and Disease. In: A.H, P.; M.P, H., editors. Contemporary Endocrinology. Totowa: Humana Press Inc.; 2007. p. 227-252.

Dufau ML, Tsai-Morris CH, Hu ZZ, Buczko E. Structure and regulation of the luteinizing hormone receptor gene. J Steroid Biochem Mol Biol 1995;53:283–291. [PubMed: 7626469]

Dufau ML, Tsuruhara T, Horner KA, Podesta E, Catt KJ. Intermediate role of adenosine 3':5'-cyclic monophosphate and protein kinase during gonadotropin-induced steroidogenesis in testicular interstitial cells. Proc Natl Acad Sci U S A 1977;74:3419–3423. [PubMed: 198785]

Geng Y, Tsai-Morris CH, Zhang Y, Dufau ML. The human luteinizing hormone receptor gene promoter: activation by Sp1 and Sp3 and inhibitory regulation. Biochem Biophys Res Commun 1999;263:366–371. [PubMed: 10491299]

Gudermann T, Birnbaumer M, Birnbaumer L. Evidence for dual coupling of the murine luteinizing hormone receptor to adenylyl cyclase and phosphoinositide breakdown and Ca2+ mobilization. Studies with the cloned murine luteinizing hormone receptor expressed in L cells. J Biol Chem 1992;267:4479–4488. [PubMed: 1311310]

Herrlich A, Kuhn B, Grosse R, Schmid A, Schultz G, Gudermann T. Involvement of Gs and Gi proteins in dual coupling of the luteinizing hormone receptor to adenylyl cyclase and phospholipase C. J Biol Chem 1996;271:16764–16772. [PubMed: 8663226]

Hsieh M, Conti M. G-protein-coupled receptor signaling and the EGF network in endocrine systems. Trends Endocrinol Metab 2005;16:320–326. [PubMed: 16054836]

Huhtaniemi IT, Eskola V, Pakarinen P, Matikainen T, Sprengel R. The murine luteinizing hormone and follicle-stimulating hormone receptor genes: transcription initiation sites, putative promoter sequences and promoter activity. Mol Cell Endocrinol 1992;88:55–66. [PubMed: 1459341]

Ji I, Koo YB, JI TH. Characterization of the rat LH/CG receptor gene: dominant suppressers, proximal regulators and transcription start sites. Endocr J 1994;2:279–287.

Koo YB, Ji I, Slaughter RG, Ji TH. Structure of the luteinizing hormone receptor gene and multiple exons of the coding sequence. Endocrinology 1991;128:2297–2308. [PubMed: 2019252]

Kosugi S, Mori T, Shenker A. The role of Asp578 in maintaining the inactive conformation of the human lutropin/choriogonadotropin receptor. J Biol Chem 1996;271:31813–31817. [PubMed: 8943222]

Lei ZM, Rao CV, Kornyei JL, Licht P, Hiatt ES. Novel expression of human chorionic gonadotropin/luteinizing hormone receptor gene in brain. Endocrinology 1993;132:2262–2270. [PubMed: 8477671]

Liao M, Zhang Y, Dufau ML. Protein kinase Calpha-induced derepression of the human luteinizing hormone receptor gene transcription through ERK-mediated release of HDAC1/Sin3A repressor complex from Sp1 sites. Mol Endocrinol 2008;22:1449–1463. [PubMed: 18372343]

Lojun S, Bao S, Lei ZM, Rao CV. Presence of functional luteinizing hormone/chorionic gonadotropin (hCG) receptors in human breast cell lines: implications supporting the premise that hCG protects women against breast cancer. Biol Reprod 1997;57:1202–1210. [PubMed: 9369188]

Loosfelt H, Misrahi M, Atger M, Salesse R, Vu Hai-Luu Thi MT, Jolivet A, Guiochon-Mantel A, Sar S, Jallal B, Garnier J, et al. Cloning and sequencing of porcine LH-hCG receptor cDNA: variants lacking transmembrane domain. Science 1989;245:525–528. [PubMed: 2502844]

McFarland KC, Sprengel R, Phillips HS, Kohler M, Rosemblit N, Nikolics K, Segaloff DL, Seeburg PH. Lutropin-choriogonadotropin receptor: an unusual member of the G protein-coupled receptor family. Science 1989;245:494–499. [PubMed: 2502842]

Meduri G, Charnaux N, Loosfelt H, Jolivet A, Spyratos F, Brailly S, Milgrom E. Luteinizing hormone/human chorionic gonadotropin receptors in breast cancer. Cancer Res 1997;57:857–864. [PubMed: 9041186]

Minegishi T, Nakamura K, Takakura Y, Miyamoto K, Hasegawa Y, Ibuki Y, Igarashi M, Minegish T. Cloning and sequencing of human LH/hCG receptor cDNA. Biochem Biophys Res Commun 1990;172:1049–1054. [PubMed: 2244890]

NIH-PA Author Manuscript NIH-PA Author Manuscript NIH-PA Author Manuscript

Rao CV. Multiple novel roles of luteinizing hormone. Fertil Steril 2001;76:1097–1100. [PubMed: 11730733]

Reiter E, McNamara M, Closset J, Hennen G. Expression and functionality of luteinizing hormone/chorionic gonadotropin receptor in the rat prostate. Endocrinology 1995;136:917–923. [PubMed: 7867600]

Reshef E, Lei ZM, Rao CV, Pridham DD, Chegini N, Luborsky JL. The presence of gonadotropin receptors in nonpregnant human uterus, human placenta, fetal membranes, and decidua. J Clin Endocrinol Metab 1990;70:421–430. [PubMed: 1688865]

Richards JS, Fitzpatrick SL, Clemens JW, Morris JK, Alliston T, Sirois J. Ovarian cell differentiation: a cascade of multiple hormones, cellular signals, and regulated genes. Recent Prog Horm Res 1995;50:223–254. [PubMed: 7740159]

Richards JS, Hedin L. Molecular aspects of hormone action in ovarian follicular development, ovulation, and luteinization. Annu Rev Physiol 1988;50:441–463. [PubMed: 3288100]

Ryan KE, Glister C, Lonergan P, Martin F, Knight PG, Evans AC. Functional significance of the signal transduction pathways Akt and Erk in ovarian follicles: in vitro and in vivo studies in cattle and sheep. J Ovarian Res 2008;1:2. [PubMed: 19014654]

Sekiguchi T, Mizutani T, Yamada K, Yazawa T, Kawata H, Yoshino M, Kajitani T, Kameda T, Minegishi T, Miyamoto K. Transcriptional regulation of the epiregulin gene in the rat ovary. Endocrinology 2002;143:4718–4729. [PubMed: 12446600]

Toth P, Li X, Rao CV, Lincoln SR, Sanfilippo JS, Spinnato JA 2nd, Yussman MA. Expression of functional human chorionic gonadotropin/human luteinizing hormone receptor gene in human uterine arteries. J Clin Endocrinol Metab 1994;79:307–315. [PubMed: 8027246]

Tsai-Morris CH, Buczko E, Wang W, Dufau ML. Intronic nature of the rat luteinizing hormone receptor gene defines a soluble receptor subspecies with hormone binding activity. J Biol Chem 1990;265:19385–19388. [PubMed: 2174034]

Tsai-Morris CH, Buczko E, Wang W, Xie XZ, Dufau ML. Structural organization of the rat luteinizing hormone (LH) receptor gene. J Biol Chem 1991;266:11355–11359. [PubMed: 2040640]

Tsai-Morris CH, Geng Y, Buczko E, Dufau ML. Characterization of diverse functional elements in the upstream Sp1 domain of the rat luteinizing hormone receptor gene promoter. J Biol Chem 1995;270:7487–7494. [PubMed: 7706295]

Tsai-Morris CH, Geng Y, Xie XZ, Buczko E, Dufau ML. Transcriptional protein binding domains governing basal expression of the rat luteinizing hormone receptor gene. J Biol Chem 1994;269:15868–15875. [PubMed: 8195242]

Tsai-Morris CH, Xie X, Wang W, Buczko E, Dufau ML. Promoter and regulatory regions of the rat luteinizing hormone receptor gene. J Biol Chem 1993;268:4447–4452. [PubMed: 8440726]

Wang H, Nelson S, Ascoli M, Segaloff DL. The 5'-flanking region of the rat luteinizing hormone/chorionic gonadotropin receptor gene confers Leydig cell expression and negative regulation of gene transcription by 3',5'-cyclic adenosine monophosphate. Mol Endocrinol 1992;6:320–326. [PubMed: 1316538]

Zhang Y, Dufau ML. Nuclear orphan receptors regulate transcription of the gene for the human luteinizing hormone receptor. J Biol Chem 2000;275:2763–2770. [PubMed: 10644740]

Zhang Y, Dufau ML. EAR2 and EAR3/COUP-TFI regulate transcription of the rat LH receptor. Mol Endocrinol 2001;15:1891–1905. [PubMed: 11682620]

Zhang Y, Dufau ML. Silencing of transcription of the human luteinizing hormone receptor gene by histone deacetylase-mSin3A complex. J Biol Chem 2002;277:33431–33438. [PubMed: 12091390]

Zhang Y, Dufau ML. Repression of the luteinizing hormone receptor gene promoter by cross talk among EAR3/COUP-TFI, Sp1/Sp3, and TFIIB. Mol Cell Biol 2003;23:6958–6972. [PubMed: 12972613]

Zhang Y, Dufau ML. Gene silencing by nuclear orphan receptors. Vitam Horm 2004;68:1–48. [PubMed: 15193450]

Zhang Y, Fatima N, Dufau ML. Coordinated changes in DNA methylation and histone modifications regulate silencing/derepression of luteinizing hormone receptor gene transcription. Mol Cell Biol 2005;25:7929–7939. [PubMed: 16135786]

Zhang Y, Liao M, Dufau ML. Phosphatidylinositol 3-kinase/protein kinase Czeta-induced phosphorylation of Sp1 and p107 repressor release have a critical role in histone deacetylase inhibitor-

mediated derepression [corrected] of transcription of the luteinizing hormone receptor gene. Mol Cell Biol 2006;26:6748–6761. [PubMed: 16943418]

Zhang Y, Liao M, Dufau ML. Unlocking repression of the human luteinizing hormone receptor gene by trichostatin A-induced cell-specific phosphatase release. J Biol Chem 2008;283:24039–24046. [PubMed: 18596044]

NIH-PA Author Manuscript

NIH-PA Author Manuscript

NIH-PA Author Manuscript

NIH-PA Author Manuscript

NIH-PA Author Manuscript

NIH-PA Author Manuscript

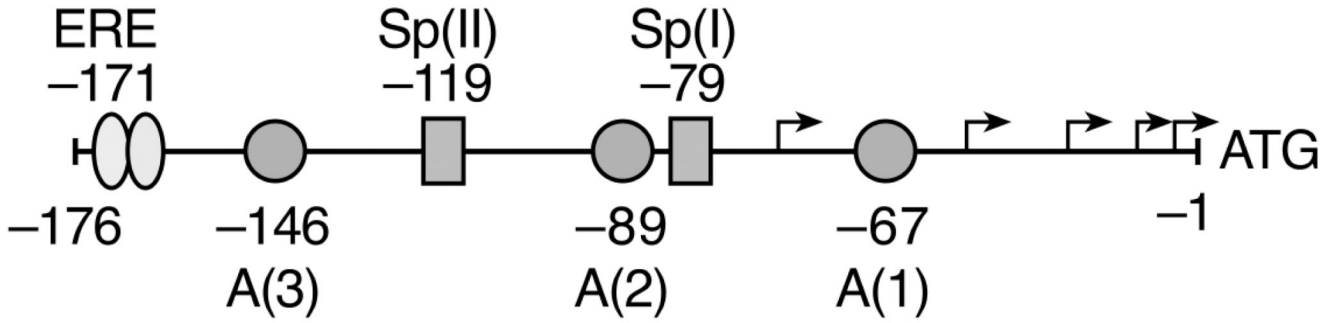

Fig. 1. The promoter of the human LHR gene

Schematic diagram of the 176 bp promoter with locations of activating Sp1/Sp3 elements Sp1 (I) and Sp1(II) (box), ERE half-sites inhibitory (oval) and nonfunctional AP2-like element (circles); arrows, transcriptional start sites; nt +1, translational initiation codon.

NIH-PA Author Manuscript

NIH-PA Author Manuscript

NIH-PA Author Manuscript

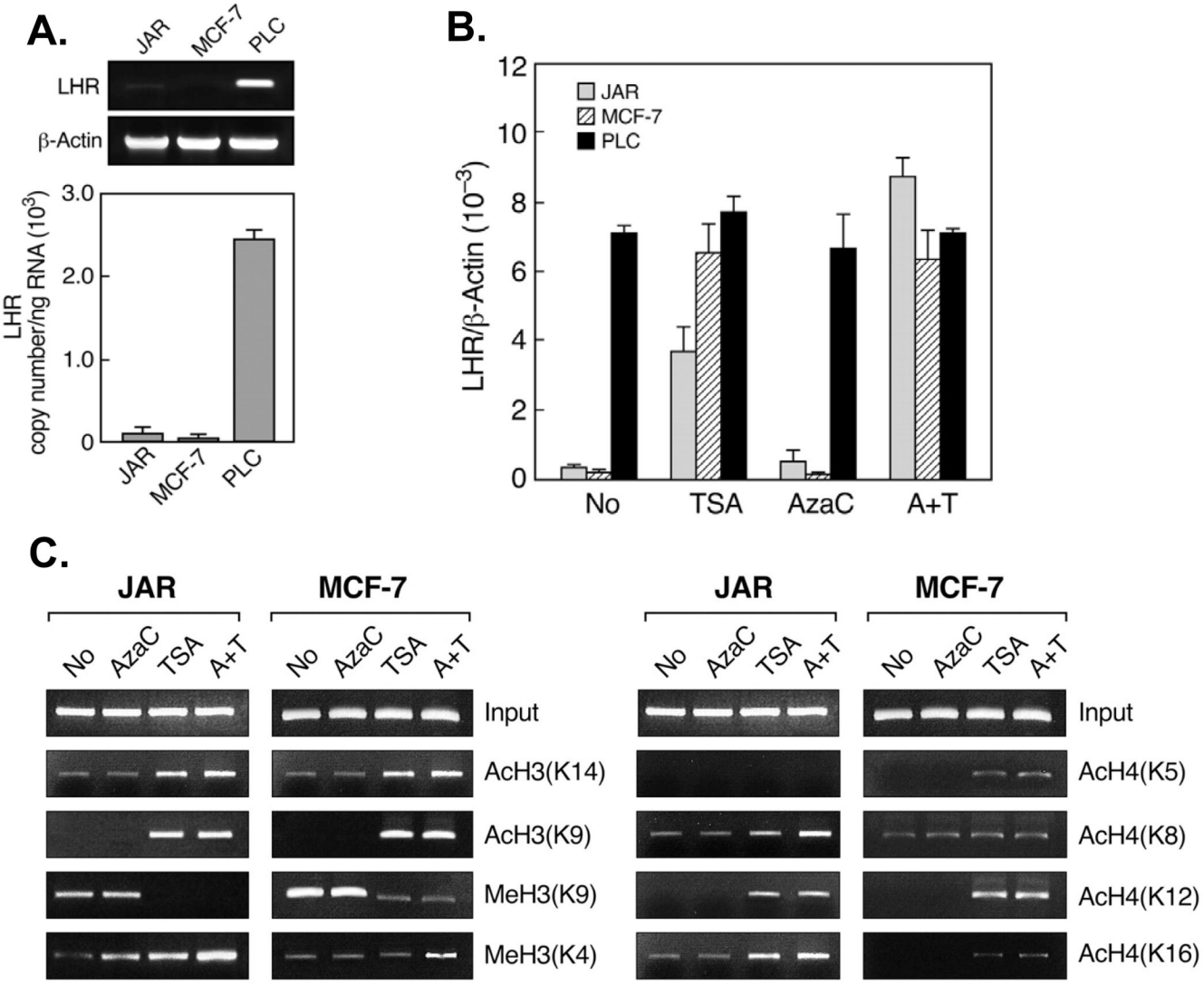

Fig. 2. States of repression/derepression of LHR expression in JAR, MCF-7 and PLC cells and the histone code in repressed and depressed states

(A) LHR mRNA levels in cells determined by conventional PCR (above) and real time PCR analyses (below). LHR is minimally expressed (repressed) in JAR and MCF-7 cells and highly expressed (derepressed) in PLC cells. **(B)** TSA and 5-AzaC treatment had differential effects on LHR gene expression assessed by RT-PCR in JAR (hypo-acetylated histones & methylated DNA promoter); MCF-7 (hypo-acetylated histones & and demethylated DNA promoter) and PLC cells (hyper-acetylated histones and demethylated promoter) treated with TSA, 5-AzaC and the combination. Expression is maximal in untreated PLC cells (control) and no changes were observed with treatment. In contrast, the expression is minimal in JAR and MCF-7 (control-No). TSA causes partial derepression of LHR gene expression in JAR cells, with increases to 50% of levels observed in derepressed cells, and complete derepression is noted with combined treatment of TSA and 5-AzaC (A+T) to levels observed in control PLC cells. In MCF-7 cells, full derepression of expression was induced by TSA alone and no further changes were observed with A+T treatment. Changes of the histone code at the promoter are essential for derepression and combined histone hyperacetylation and DNA promoter demethylation are required for full derepression. **(C)** Histone code associated with repressed

NIH-PA Author Manuscript

NIH-PA Author Manuscript

NIH-PA Author Manuscript

(No) and derepressed (TSA) LHR gene expression in JAR and MCF-7 cells. H3/H4 acetylation or demethylation/methylation was not further influenced by 5-AzaC, and 5-AzaC alone had no effect. The PLC histone code in controls (not-shown) was identical to that observed in TSA or TSA/5-AzaC treated-JAR and MCF-7 cells (derepressed) (Zhang et al., 2005).

NIH-PA Author Manuscript

NIH-PA Author Manuscript

NIH-PA Author Manuscript

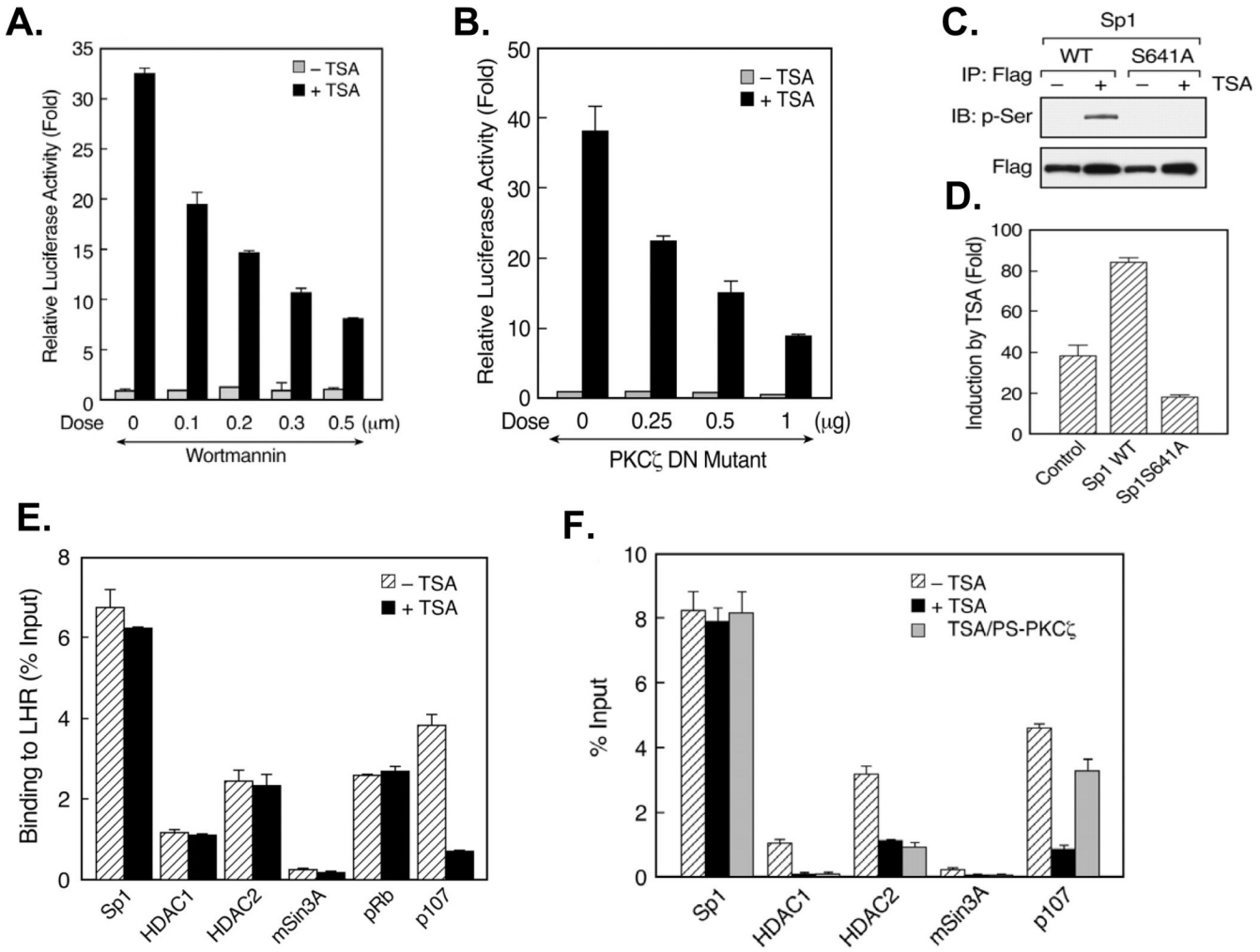

Fig. 3. The PI3K/PKCζ pathway in TSA-induced LHR gene activation

(A) The role of PI3K is shown by studies of reporter gene analyses of LHR gene promoter activity in JAR cells pretreated with Wortmaninn (inhibitor of PI3K) followed by incubation with and without TSA (100 ng/ml) for 24 h. Transcriptional activation of the LHR gene by TSA was inhibited by the PI3K inhibitor in JAR cells. Also, Wortmannin inhibited pSer phosphorylation induced by TSA and pKCζ phosphorylation induced by TSA (not shown). **(B)** PKCζ is the downstream effector of PI3K in TSA-induced derepression of JAR and MCF-7 cells. Reporter gene analysis of LHR gene promoter activity in JAR cells in presence of increasing doses of PKCζ dominant negative construct. The dose dependent inhibition demonstrated that PKCζ has a critical role during TSA-induced LHR gene activation. **(C)** PKCζ interacts with Sp1 (not shown) and phosphorylates Sp1 at S641. Phophorylation of Sp1 is not observed upon overexpression of the S641A Sp1-mutant protein. **(D)** Overexpression of the Sp1 S641A mutant antagonized TSA-activated LHR gene promoter activity maximized by overexpression of Sp1 in these cells. **(E)** and **(F)** TSA through the activation of the PIK3/PKCζ pathway causes Sp1 phosphorylation and release of the inhibitor p107 from Sp1 in JAR and MCF-7 cells. This dissociation was inhibited by PKCζ specific inhibitor. In addition, the HDAC/Sin3A complex dissociates from MCF-7 cells independently of PKCζ action. Such dissociation is related to changes in chromatin structure caused by the histone code induced by TSA in presence of the fully demethylated promoter (Zhang et al., 2006).

NIH-PA Author Manuscript

NIH-PA Author Manuscript

NIH-PA Author Manuscript

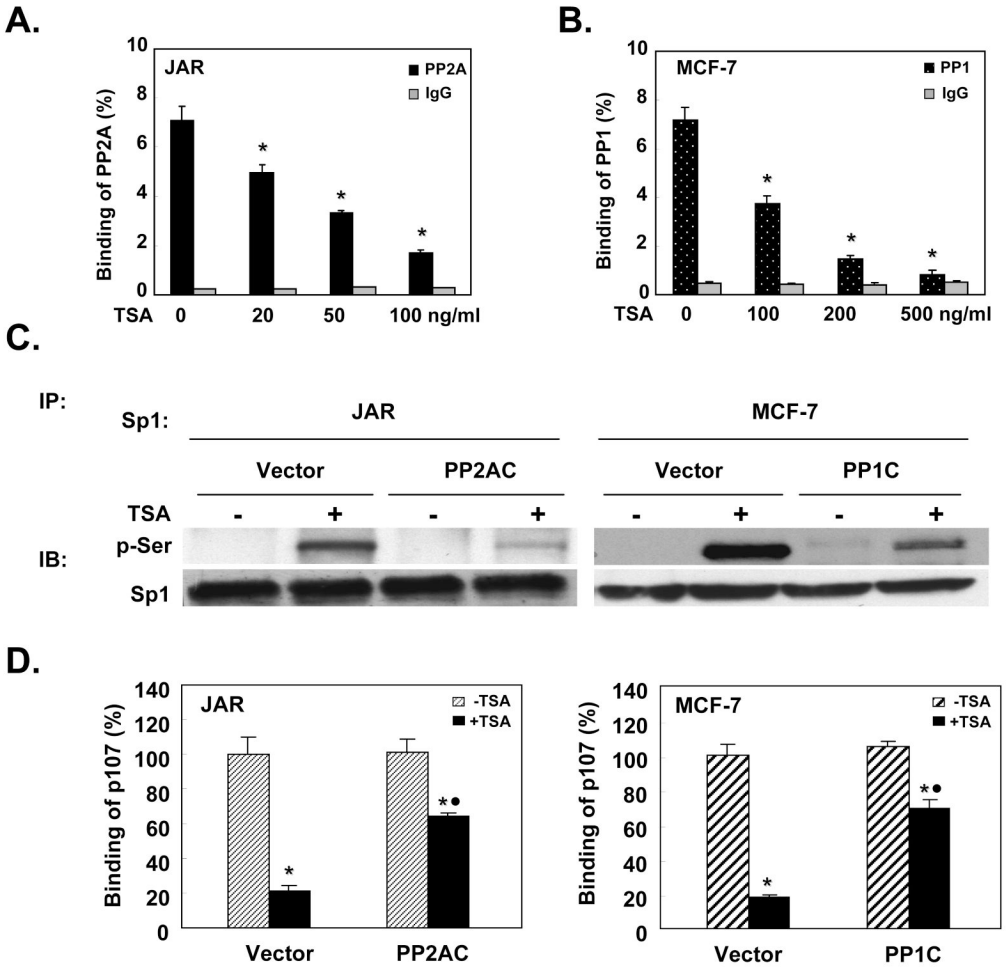

Fig. 4. Release of phosphatases permits Sp1 phosphorylation and derepression

(A, B) TSA treatment causes chromatin changes that induce cell specific release of phosphatase PP2 from JAR cells and PP1 from MCF7 cells as revealed by ChIP analyses of the association of PP1 or PP2 catalytic subunit to the LHR gene promoter. This permits the phosphorylation of Sp1 by P13K/PKCζ that causes p107 repressor release (see Fig. 3). **(C)** Phosphorylation of Sp1 induced by TSA in JAR and MCF7 cells is antagonized by overexpression of cell specific phospatase catalytic subunit (PP1C, PP2AC) shown by immunoprecipitation (IP) of cell lysates with Sp1 antibody followed by Western using anti-phosphoserine antibody (p-Ser). **(D)** The consequent release of repressor p107 revealed by ChIP assay is also antagonized by PP1C and PP2A (Zhang et al., 2008).

NIH-PA Author Manuscript

NIH-PA Author Manuscript

NIH-PA Author Manuscript

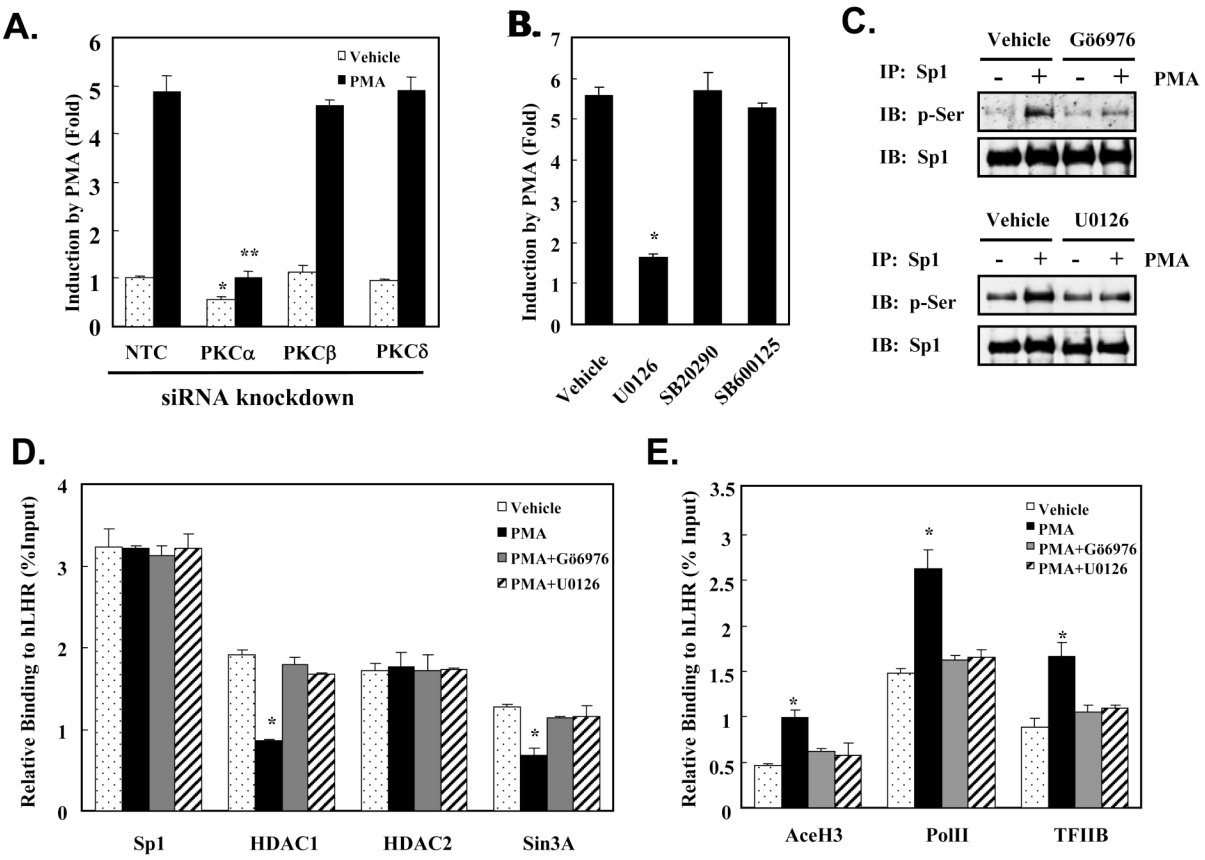

Fig. 5. The PKCα/Erk signaling in PMA-induced LHR activation

(A) Participation of PKCα in PMA-induced LHR stimulation is shown by reporter gene analyses in HeLa cells transfected with siRNA against different PKC isoforms (α,β,δ) and negative control siRNA (NTC). Knockdown of PKCα markedly reduced the basal LHR promoter activity and abolishes the PMA-elicited activation, whereas repression of other PKC isoforms has no effect on LHR expression. **(B)** The Erk cascade is the downstream effector of PMA-induced LHR activation. PMA stimulation on LHR promoter is largely blocked by inhibition of Erk cascade with U0126. In contrast, neither an inhibitor of p38 (SB20290) nor that of JNK (SB600125) exhibits any impact. **(C)** Dependence of PMA-induced Sp1 phosphorylation on PKCα/Erk is shown. Blockade of PKCα or Erk with their inhibitors (Gö6976 and U0126) abrogates PMA-indcued Sp1 phosphorylation. **(D)** HDAC1/mSin3A complex but not HDAC2 is released from the LHR promoter in response to PMA. This complex release is dependent on the PKCα/Erk signaling since it is impaired by inhibition of PKCα activity with Gö6976 and blockade of Erk with U0126. **(E)** These events lead to H3 acetylation and recruitment of TFII B and Pol II to the promoter and LHR gene transcriptional activation (Liao et al., 2008).