NIH Public Access
Author Manuscript
Immunol Endocr Metab Agents Med Chem. Author manuscript; available in PMC 2009 December 1.

Published in final edited form as:
Immunol Endocr Metab Agents Med Chem. 2008 December 1; 8(4): 349–357. doi: 10.2174/187152208787169233.

Spatial Segregation of Phosphatidylinositol 4,5-Bisphosphate (PIP_2) Signaling in Immune Cell Functions

Corey M. Johnson[1] and **William Rodgers**[1,2]

[1] Cardiovascular Biology Research Program, Oklahoma Medical Research Foundation

[2] Departments of Microbiology and Immunology, & Pathology, University of Oklahoma Health Sciences Center

Abstract

Phosphatidylinositol 4,5-bisphosphate (PIP_2) is a prevalent phosphoinositide in the inner leaflet of the plasma membrane. PIP_2 associates with an ever-growing list of proteins, and participates in a variety of cellular processes. PIP_2 signaling to the actin cytoskeleton transduces specific signals necessary for changes in morphology, motility, endocytosis, exocytosis, phagocytosis, and cell activation. The mechanism(s) by which PIP_2 signaling pathways are specific is a topic of intense investigation. One working model is the compartmentalization of PIP_2-mediated signaling by concentrating PIP_2 in cholesterol-dependent membrane rafts, therefore providing spatial and temporal regulation. Here we discuss properties of PIP_2 signaling to the actin cytoskeleton in immune cell functioning, the association of PIP_2 cellular pools with membrane rafts, and recent work investigating models for compartmentalization of PIP_2-mediated signaling in membrane rafts to the actin cytoskeleton.

Keywords

membrane rafts; phosphatidylinositol 4,5-bisphoshpate (PIP_2); actin; immunological synapse

Background of PIP_2

Phosphatidylinositol 4,5-bisphosphate (PIP_2) is the most prevalent phosphoinositide in mammalian cell membranes, comprising approximately 1% of plasma membrane phospholipids [1,2] and >99% of the doubly phosphorylated phosphoinositides. Structurally, PIP_2 consists of a negatively charged lipid headgroup, with phosphates at the 4 and 5 position of the inositol ring. Biologically, PIP_2 serves as both a precursor of important second messengers, as well as a co-factor for numerous membrane-associated enzymes. PIP_2 second messenger functions are often initiated by hydrolysis of PIP_2 by phospholipase C (PLC) to produce inositol 1,4,5-triphosphate (IP_3) and diacylglycerol (DAG) [3]. Once generated, IP_3 binds to an IP_3-specific receptor, which in turn leads to a release of intracellular Ca^{2+} stores and, in some cases, activation of store-operated Ca^{2+} channels in the plasma membrane [4]. DAG in turn regulates important membrane-associated enzymes, notably PKC. DAG functions are blocked by its phosphorylation by DAG kinase. In T cells, conversion of DAG to phosphatidic acid represents an important arm in regulating T cell receptor signaling and production of anergic, or nonresponsive, T cells [5].

Correspondence should be addressed to: Dr. William Rodgers, Oklahoma Medical Research Foundation, Cardiovascular Biology Research Program, 825 NE 13th St., MS 45, Oklahoma City, Oklahoma 73104, William-Rodgers@omrf.ouhsc.edu, Phone: (405) 271-3550, Fax: (405) 271-8237.

NIH-PA Author Manuscript
NIH-PA Author Manuscript
NIH-PA Author Manuscript

NIH-PA Author Manuscript

NIH-PA Author Manuscript

NIH-PA Author Manuscript

Another critical function of PIP_2 is that of binding actin filaments to the plasma membrane [6], either by activating proteins that provide signals for actin polymerization, or by serving as a lipid co-factor for actin-binding membrane proteins. Consequently, PIP_2, and its PI3K product, phosphatidylinositol 3,4,5-trisphosphate (PIP_3), are essential for many of the actin-dependent properties of cells, including cell morphology, cell motility [7,8], endocytosis and exocytosis [9–11], and phagocytosis [12,13].

In the immune system, PIP_2-dependent properties in actin association with the plasma membrane are necessary for events that underlie both adaptive and innate immune responses. In the case of adaptive immune responses, this property is exemplified by the immunological synapse, which is a highly structured membrane complex of signaling and adhesion molecules that forms where activated lymphocytes bind to cells bearing antigen (Ag). Engagement of multichain immune recognition receptors (MIRR), such as T cell receptor (TCR) and B cell receptor (BCR), initiates signaling cascades that lead to increased PIP_2 hydrolysis and activation of PIP_2-dependent effectors that function in actin binding to the plasma membrane. These events result in a remodeling of the cell cytoskeleton and restructuring of the lymphocyte, and culminate in formation of the immunological synapse. Once established, the signals that maintain the immunological synapse are maintained for hours, a property that is necessary for effective cell activation; abbreviating signals necessary to maintain the immunological synapse results in disengagement of the lymphocyte and incomplete activation.

PIP_2-dependent functions in interactions between the outer membrane and actin filaments for innate immune responses includes phagocytosis by activated macrophages and neutrophils [14]. Specifically, PIP_2 acts as a second messenger in phagocytosis by regulating actin capping, nucleation of *de novo* F-actin, and targeting of actin-anchoring, crosslinking, and severing proteins [15]. It is suggested that local PIP_2 accumulation is involved in the initial recruitment of actin to the phagocytic cup, while disappearance of PIP_2 parallels the course of actin disassembly [16]. Furthermore, evidence suggests that localized synthesis of PIP_2 may play a role in its localized concentration for phagocytosis. As we discuss below, enrichment of PIP_2 in discrete membrane pools or domains is an attractive hypothesis in that it provides a mechanism for regulating the spatial and temporal functions of PIP_2. Importantly, recent experimental findings provide strong evidence for this model.

Mechanisms of PIP_2-regulated actin-membrane interactions

As the examples above illustrate, PIP_2 is central to the actin and membrane interactions that are necessary for efficient immune cell function. Examples of proteins ubiquitous to immune cells and that function in PIP_2-regulated interactions between cell membranes and the actin cytoskeleton are listed in Table 1. These factors have an array of functions, from providing signals for actin polymerization, to peptides that serve as structural links between actin filaments and cell membranes. Discussed below are the mechanisms by which PIP_2 regulates actin-binding proteins important for immune cell functioning.

Vav

Vav is a 95-kDa multidomain protein that serves as a guanine-nucleotide exchange factor (GEF) that activates the Rho family of small guanosine triphosphatases (GTPases), which include the Rho GTPases Cdc42 and Rac (Figure 1). Signaling from Vav is initiated by its activation by tyrosine phosphorylation, which occurs temporally proximal to engagement of the MIRR proteins. Similarly, inhibition of Vav or its effectors blocks receptor-dependent changes in the actin cytoskeleton and cell activation. Furthermore, alterations in lymphocyte activation due to disrupted Vav also affect lymphocyte development [17–19].

NIH-PA Author Manuscript

NIH-PA Author Manuscript

NIH-PA Author Manuscript

Vav is cytoplasmic, but localizes to the plasma membrane upon activation by binding to PIP_2 and PIP_3 via a pleckstrin homology (PH) domain. PH domains are small protein modules comprised of approximately 100–120 amino acids [20,21] that bind specifically to phosphinositides, thereby anchoring the protein to the plasma membrane. Crystal structures of PH domains bound to IP_3 reveal their mechanism of binding to phosphoinositides [22,23]. Typically, a set of lysine residues in the PH domain interacts with the phosphates at the 4 and 5 position of the inositol ring. These interactions lock the phosphatidylinositol phosphate into the binding pocket of the enzyme.

Rac and Cdc42

The Rho GTPases Rac and Cdc42 serve are molecular switches that cycle between two conformational states: one bound to GTP (active state), and the other bound to GDP (inactive state). Following activation, Rac and Cdc42 provide signals for actin polymerization (Figure 1). Rac activation produces lamellipodia and membrane ruffles [24], while Cdc42 activation produces long, finger-like protrusions called filopodia [25,26]. A principal effector of Cdc42 is the Wiskott-Aldrich syndrome protein (WASP). WASP is expressed exclusively in haematopoietic cells [27] and N-WASP is expressed in neurons [28]. WASP is activated in part by binding PIP_2 via a PH domain. WASP also contains a Cdc42/Rac-binding (CRIB) domain and a VCA domain (Verprolin homology, cofilin homology, and highly acidic), which activates the Arp 2/3 complex [29]. When WASP is not bound to PIP_2 or Cdc42, it assumes an auto-inhibited conformation [30]. However, binding of PIP_2 and Cdc42 induces conformational changes that activate WASP, and subsequently the Arp 2/3 complex, which nucleates actin [31–33]. Finally, similar to the Cdc42-WASP pathway, Rac activates actin polymerization through a related protein WASP family verprolin-homologous protein (WAVE). WAVE, like all WASP family proteins, activates the Arp 2/3 complex through its VCA domain [34].

ERM proteins

The ezrin-radixin-moesin (ERM) proteins are a separate group of PIP_2-regulated group of proteins that function in tethering actin filaments to the plasma membrane. By doing so, ERM proteins control cell shape, cell adhesion, cytokinesis and cytoskeleton anchoring in various cell types [35]. The ERM family proteins bind PIP_2 through an N-terminal FERM domain (band 4.1, ezrin, radixin, moesin) [36], which forms a PIP_2 binding pocket from a basic cleft between two subdomains [36]. The N-terminal and C-terminal domain of ERM proteins interact and stabilize a dormant folded state. PIP_2 binding produces the “active” conformation of ERM proteins, allowing the C-terminal domain to interact with the actin cytoskeleton [36, 37]. In addition to regulation by PIP_2 binding, the ERM proteins are also regulated through phosphorylation of a conserved threonine residue [38]. Once activated, the ERM proteins bind simultaneously to membrane-associated proteins and F-actin via their N-terminal FERM domain and their C-terminus, respectively.

One effect of the regulated tethering of actin filaments to the plasma membrane by ERM proteins is modifying membrane fluidity during cell activation [39,40]. In resting cells, the ERM proteins are in the active conformation, bound to PIP_2 and phosphorylated. The constitutive binding of the plasma membrane to the rigid actin cytoskeleton reduces membrane flexibility. However, upon cell activation, ERM proteins are rapidly dephosphorylated and assume the “inactive” conformation. Inactivation of ERM proteins reduces tethering of the bilayer to the cytoskeleton, which increases membrane flexibility in order to assist the cell adopt changes in shape and structure necessary for adhesion [41].

ERM-regulated interactions between actin filaments and the plasma membrane are also important for cell movement/migration, which is necessary for immune response, wound

NIH-PA Author Manuscript

NIH-PA Author Manuscript

NIH-PA Author Manuscript

repair, metastasis, cell survival and development [42,43]. For example, adherence and migration of T cells into inflamed tissue require an ERM dependent polarization of the T cell [44]. The formation of a leading edge protrusion, or lamellipodium, begins the migration process, followed by a formation of new adhesion sites at the front, cell body contraction, and detachment of adhesion sites at the rear. The entire process requires tight, spatial and temporal regulation of actin cytoskeleton dynamics, including that of binding of ERM proteins to the plasma membrane and actin filaments [42,45].

Talin and vinculin

Another membrane-tethering protein for actin filaments is talin, which binds to integrins, including the T cell β2 integrin LFA-1. Integrins represent important adhesion receptors that undergo a change from an inactive to active conformation as a result of "inside-out" signaling. Talin binding to cytoplasmic tail of the β subunit through an N-terminal FERM domain represents a final step in the integrin activation [46–48]. Talin binding to actin filaments occurs mostly through a C-terminal rod domain. T cells require talin for regulation of chemokine induced adhesion and migration [49,50] and TCR-induced up-regulation of LFA-1 at the Immunological synapse [51].

Talin binds to acidic phospholipids and it is activated by binding PIP_2 within its FERM domain [33]. However, PIP_2-dependent regulation of integrin activation also includes vinculin binding to talin. Vinculin is a component of focal adhesions that localizes to cell-cell junctions, where it is thought to regulate the assembly and stabilization of the junction [52]. Focal adhesions are modulated by PIP_2 [53,54] and consist of structural and signaling molecules that participate in both inside-out and outside-in signal transduction [55]. Vinculin, similar to WASP, exists in an inactive conformation previous to PIP_2 binding where its head and tail domains interact with each other [56]. However, binding of PIP_2 to the vinculin D5 domain opens a talin-binding site in its D1 domain [57,58]. Once activated, binds to actin-associated proteins that include α-actinin, α-catenin, and Arp2/3. Complexes containing vinculin and associated proteins therefore modulate focal adhesion assembly [33].

Gelosin

PIP_2 can also control filament structure by regulating proteins that function in actin filament disassembly, such as gelsolin, villin and severin [33,59–61]. In the case of gelsolin, which is a potent actin filament-severing protein, PIP_2 binding dissociates gelsolin-actin complexes and inhibits gelosin-dependent actin severing [59,62]. PIP_2 binding occurs through separate clusters of basic residues located in a P1 and P2 regions of the N-terminus [63]. A third PIP_2-binding site has also been identified at the gelosin C-terminal region. Interestingly, rather than directly competing for the actin binding site, PIP_2 induces conformational changes in gelsolin which disrupt its association with actin [64].

Spatial regulation of PIP_2 functions

The central role that PIP_2 plays in cytoskeleton structure and cell physiology underscores the necessity of its proper regulation. Further complicating this paradigm is that separate PIP_2 functions are often simultaneous and sometimes competing. One mechanism for providing necessary regulation of PIP_2 functions is by establishing and maintaining separate and discrete pools of PIP_2 in the plasma membrane. Spatially segregating separate PIP_2 pools, such by concentrating the PIP_2 in discrete domains, is hypothesized to provide a spatio-temporal control of PIP_2-dependent functions. For example, a localized accumulation of PIP_2 is predicted to augment PIP_2-dependent by increasing the effective concentration of PIP_2 in these regions. Association of specific PIP_2 effectors with these regions would therefore spatially concentrate effector functions.

NIH-PA Author Manuscript

NIH-PA Author Manuscript

NIH-PA Author Manuscript

Multiple mechanisms exist to form localized pools or concentrations of PIP_2 in the plasma membrane. One relates to sequestering of PIP_2 through electrostatic interactions with poly-basic proteins such as myristoylated alanine rich C-kinase substrate (MARCKS) [65,66], GAP43 (growth-associated protein 43), and CAP23 (cytoskeleton-associated protein 23). MARCKS is ubiquitously expressed [67], while GAP43 and CAP23 are expressed primarily in neurons. The poly-basic proteins are anchored to the plasma membrane by an N-terminal acylation and binding to PIP_2 via a cluster of basic residues known as a basic effector domain [1,66]. MARCKS, which is present at similar concentrations as PIP_2 (10μM), can laterally sequester three tetravalent acidic PIP_2. Accordingly, a cluster of MARCKS proteins can sequester a large number of PIP_2 molecules into spatially segregated membrane rafts.

To make the localized concentration of PIP_2 bioavailable, the electrostatic sequestration of PIP_2 by MARCKS must be interrupted. Calcium/calmodulin (Ca/CaM) interacts directly with the basic residues of the effector domain and allows MARCKS to be released from the membrane [68,69]. This action makes the electrostatically sequestered raft PIP_2 pools available for PIP_2 signaling to the actin cytoskeleton. Another mechanism for reversing PIP_2 sequestration is by phosphorylation of MARCKS by PKC. For example, phosphorylation of serine residues in the basic effector domain cause a reduced electrostatic attraction for the membrane and allow MARCKS to translocate to the cytoplasm [1,70].

A separate mechanism for establishing spatially discrete pools of PIP_2 is through its association with specific lipid-enriched domains, such as the cholesterol-dependent membrane rafts. In general, membrane rafts serve as a platform for signaling events in the plasma membrane, including many that do involve PIP_2. In principal, rafts are modeled as membrane “reaction chambers” that increase the kinetics of signaling reactions by concentrating substrates and enzymes together in the same membrane microenvironment [71]. In immune cells, such effectors will include PLC and Vav, which are concentrated in rafts through their association with raft-associated linker molecules, such as linker for activation of T cells (LAT) (Figure 1).

Structurally, membrane rafts are heterogeneous in nature, ranging from nanoclusters that are 10 nm in size and contain only a few protein molecules, to nanodomain complexes that are tens of nanometers in diameter, and even larger micron-size raft macrodomains [72]. Examples of raft macrodomains include the Immunological synapse in stimulated lymphocytes, and raft-enriched adhesion complexes. Furthermore, separate raft nanodomains likely have distinct compositions, thereby adding another level of complexity. Indeed, one important outcome from production of raft macrodomains may be to bring together proteins and lipids into the same membrane environment from one that is sequestered between separate raft nanodomains.

Mechanisms that distinguish protein clustering into macrodomains versus the nanodomains and smaller nanoclusters represent an ongoing topic of study. One important factor is the cell cytoskeleton and its association with the membrane bilayer. For example, the raft macrodomains often co-enrich with actin filaments, and they form in an actin-dependent manner. Interestingly, one recent study, using FRET, demonstrated the actin cytoskeleton was at least as important as cholesterol in a specific co-clustering of raft-associated membrane fluorescent proteins [73]. The mechanism by which the actin cytoskeleton promotes clustering of raft proteins is unclear, but it may include establishing an actin-dependent ordering of membrane lipids such as that recently demonstrated in liposomes [74]. Altogether, the role of actin cytoskeleton in forming membrane rafts together with the properties of PIP_2 in establishing linkages between actin filaments and the plasma membrane suggest a pivotal role for PIP_2 in forming and maintaining plasma membrane rafts.

NIH-PA Author Manuscript

NIH-PA Author Manuscript

NIH-PA Author Manuscript

Localization of PIP_2 functions to membrane rafts evidenced using targeted phosphatases

Earlier biochemical experiments have provided evidence of a compartmentalization of PIP_2 in membrane rafts [75–80]. For example, measurement of Triton X-100 (TX 100)-resistant membranes, which historically have been a working definition of rafts, showed up to half of the total cellular PIP_2 was present in the detergent-resistant membranes [76]. Furthermore, disrupting membrane rafts by depleting membrane cholesterol using methyl-β-cyclodextrin (MβCD) inhibited epidermal growth factor- and bradykinin-stimulated phosphatidylinositol turnover [78], thus suggesting raft integrity is necessary for efficient PIP_2-dependent signaling. Replacing the cholesterol rescued hormone-stimulated PIP_2 hydrolysis [78]. Similarly, heterotrimeric G-proteins, seven transmembrane domain receptors, and inositol triphosphate receptors are enriched in membrane caveolae [77], which share many of the properties of membrane rafts.

As these examples illustrate, data demonstrating raft-specific properties of PIP_2 often utilized methods that are disruptive in nature in characterizing cell membranes. Accordingly, some investigators contend that deduced roles of rafts in PIP_2 functions are the outcome of experimental artifacts arising from these invasive approaches [81,82]. Importantly, however, one recent study from our group demonstrated compartmentalization of PIP_2 signaling in intact, viable T cells [83]. Specifically, the yeast PIP_2-specific phosphatase Inp54p was targeted to either membrane fraction using separate membrane anchoring signals (Figure 2A, B, and C). Both phosphatases altered the phenotype of transfected T cells (Figure 2D). Interestingly, an increase in the raft pool of PIP_2 resulted in an activation phenotype, represented by an increase in membrane ruffling (Figure 2D) and cell spreading on poly-L-lysine. In contrast, decreasing raft PIP_2 pools resulted in cells that were smooth in appearance and lacking the background ruffling evidenced in control cells, as well as an inhibited capping when stimulated by crosslinking the TCR. Importantly, neither phosphatase altered the total PIP_2 levels in the cells, thus showing that the changes in phenotype can be attributed to the alterations in the relative amount of PIP_2 in each membrane pool.

Another interesting finding from the experiments with targeted phosphatases was that a specific reduction of nonraft-associated PIP_2 coincided with a large increase in raft-associated PIP_2 (Figure 2B and C). These data therefore suggest that consumption of nonraft PIP_2 is offset by an increase in the synthesis of PIP_2 in membrane rafts (Figure 3A). Alternatively, depleting nonraft PIP_2 may result in an increase in the expression of PIP_2-binding proteins such as MARCKS, which will increase the affinity of PIP_2 for ordered membrane environments such as the rafts (Figure 3B) [84].

Segregation of PIP_2 by localized synthesis

Consistent with the model illustrated in Figure 3A regarding compartmentalized synthesis of PIP_2, earlier experimental data show PIP_2 synthesis occurs within specific regions of the plasma membrane. For example, PIP_2 is synthesized through phosphorylation of PI4P by PI4P5K [85], and both the PI4P5K and PI3K are localized to sites of actin polymerization occurs [86–90]. In the case of PI4P5K, three isoforms of this enzyme occur: α, β, and γ [91–94]. The structural variation of the PI4P5K isoforms, along with small G-proteins and their regulators, may determine the intracellular location of PIP_2 synthesis [95, 96].

Some evidence for localized synthesis as a means of affecting actin polymerization exists. Expressing PI4P5K in Cos-7 cells induced massive actin polymerization and produced a “pine needle” cell morphology [97], which is also similar to what was observed by artificially increasing the raft pool of PIP_2 using targeted PIP_2 phosphatase. Localized synthesis has also been shown to regulate actin-dependent membrane ruffle formation [98] and phagocytosis [90]. Upon agonist stimulation, the small GTPase ADP-ribosylation factor 6 (Arf 6) is

NIH-PA Author Manuscript

NIH-PA Author Manuscript

NIH-PA Author Manuscript

activated. PI4P5Kα is a downstream effector of Arf 6 and colocalizes with the GTPase in membrane ruffles [98]. These studies also show that the activation of PI4P5Kα is dependent upon PA, the product of phospholipase D (PLD). PIPKIα also accumulates transiently on forming phagosomes [90]. These studies show the localization of PIP_2 synthesis at the phagasomal cup and that a mutant PIPKIα, lacking kinase activity, impairs phagocytosis.

Summary and Future Directions

In summary, the importance of PIP_2 and its regulation is reflected in its multiplicity of functions. PIP_2 signaling to the actin cytoskeleton transduces specific signals necessary for changes in morphology, motility, endocytosis, exocytosis, phagocytosis and T cell activation. We have discussed separate models of PIP_2 signaling from the plasma membrane to the actin cytoskeleton and how, specifically, PIP_2 may be spatially segregated in order to provide the localized concentration of PIP_2 necessary to regulate its various cellular functions. One working model is the compartmentalization of PIP_2-mediated signaling by concentrating PIP_2 into membrane rafts through binding of raft-associated proteins. There is also evidence of localized synthesis of PIP_2 by PI4P5K in the raft fraction of the membrane. Additionally, specific depletion of raft-associated PIP_2 by targeted phosphatases produces specific and distinct phenotypes in T cells. These phenotypes include changes in actin-dependent processes such as changes in morphology, cell spreading, and actin capping.

References

1. McLaughlin S, Wang J, Gambhir A, Murray D. Annu Rev Biophys Biomol Struct 2002;31:151–75. [PubMed: 11988466]
2. Gamper N, Shapiro MS. J Physiol 2007;582:967–75. [PubMed: 17412762]
3. Berridge MJ, Irvine RF. Nature 1984;312:315–21. [PubMed: 6095092]
4. Gallo EM, Cante-Barrett K, Crabtree GR. Nat Immunol 2006;7:25–32. [PubMed: 16357855]
5. Fathman CG, Lineberry NB. Nat Rev Immunol 2007;7:599–609. [PubMed: 17612584]
6. Raucher D, Stauffer T, Chen W, Shen K, Guo S, York JD, Sheetz MP, Meyer T. Cell 2000;100:221–8. [PubMed: 10660045]
7. Insall RH, Weiner OD. Dev Cell 2001;1:743–7. [PubMed: 11740936]
8. Golub T, Caroni P. J Cell Biol 2005;169:151–65. [PubMed: 15809307]
9. Cremona O, De Camilli P. J Cell Sci 2001;114:1041–52. [PubMed: 11228149]
10. Martin TF. Curr Opin Cell Biol 2001;13:493–9. [PubMed: 11454457]
11. Downes CP, Gray A, Lucocq JM. Trends Cell Biol 2005;15:259–68. [PubMed: 15866030]
12. Simonsen A, Wurmser AE, Emr SD, Stenmark H. Curr Opin Cell Biol 2001;13:485–92. [PubMed: 11454456]
13. Botelho RJ, Teruel M, Dierckman R, Anderson R, Wells A, York JD, Meyer T, Grinstein S. J Cell Biol 2000;151:1353–68. [PubMed: 11134066]
14. Kwiatkowska K, Sobota A. Bioessays 1999;21:422–31. [PubMed: 10376013]
15. Hinchliffe KA, Ciruela A, Irvine RF. Biochim Biophys Acta 1998;1436:87–104. [PubMed: 9838059]
16. Scott CC, Dobson W, Botelho RJ, Coady-Osberg N, Chavrier P, Knecht DA, Heath C, Stahl P, Grinstein S. J Cell Biol 2005;169:139–49. [PubMed: 15809313]
17. Tarakhovsky A, Turner M, Schaal S, Mee PJ, Duddy LP, Rajewsky K, Tybulewicz VL. Nature 1995;374:467–70. [PubMed: 7700358]
18. Zhang R, Alt FW, Davidson L, Orkin SH, Swat W. Nature 1995;374:470–3. [PubMed: 7700359]
19. Turner M, Mee PJ, Walters AE, Quinn ME, Mellor AL, Zamoyska R, Tybulewicz VL. Immunity 1997;7:451–60. [PubMed: 9354466]
20. Haslam RJ, Koide HB, Hemmings BA. Nature 1993;363:309–10. [PubMed: 8497315]
21. Harlan JE, Hajduk PJ, Yoon HS, Fesik SW. Nature 1994;371:168–70. [PubMed: 8072546]
22. Lemmon MA, Ferguson KM. Biochem J 2000;350(Pt 1):1–18. [PubMed: 10926821]

NIH-PA Author Manuscript NIH-PA Author Manuscript NIH-PA Author Manuscript

23. Overduin M, Cheever ML, Kutateladze TG. Mol Interv 2001;1:150–9. [PubMed: 14993348]
24. Ridley AJ, Comoglio PM, Hall A. Mol Cell Biol 1995;15:1110–22. [PubMed: 7823927]
25. Kozma R, Ahmed S, Best A, Lim L. Mol Cell Biol 1995;15:1942–52. [PubMed: 7891688]
26. Kozma R, Sarner S, Ahmed S, Lim L. Mol Cell Biol 1997;17:1201–11. [PubMed: 9032247]
27. Derry JM, Ochs HD, Francke U. Cell 1994;79:922.
28. Miki H, Miura K, Takenawa T. EMBO J 1996;15:5326–35. [PubMed: 8895577]
29. Machesky LM, Insall RH. Curr Biol 1998;8:1347–56. [PubMed: 9889097]
30. Kim AS, Kakalis LT, Abdul-Manaan N, Liu GA, Rosen MK. Nature 2000;404:151–158. [PubMed: 10724160]
31. Machesky LM, Gould KL. Curr Opin Cell Biol 1999;11:117–21. [PubMed: 10047519]
32. Rohatgi R, Ma L, Miki H, Lopez M, Kirchhausen T, Takenawa T, Kirschner MW. Cell 1999;97:221–31. [PubMed: 10219243]
33. Sechi AS, Wehland J. J Cell Sci 2000;113:3685–95. [PubMed: 11034897]
34. Yamazaki D, Oikawa T, Takenawa T. J Cell Sci 2007;120:86–100. [PubMed: 17164293]
35. Bretscher A, Chambers D, Nguyen R, Reczek D. Annu Rev Cell Dev Biol 2000;16:113–43. [PubMed: 11031232]
36. Hamada K, Shimizu T, Matsui T, Tsukita S, Hakoshima T. EMBO J 2000;19:4449–62. [PubMed: 10970839]
37. Arpin M, Algrain M, Louvard D. Curr Opin Cell Biol 1994;6:136–41. [PubMed: 8167019]
38. Bretscher A, Edwards K, Fehon RG. Nat Rev Mol Cell Biol 2002;3:586–99. [PubMed: 12154370]
39. Delon J, Kaibuchi K, Germain RN. Immunity 2001;15:691–701. [PubMed: 11728332]
40. Gupta N, Wollscheid B, Watts JD, Scheer B, Aebersold R, DeFranco AL. Nat Immunol 2006;7:625–33. [PubMed: 16648854]
41. Faure S, Salazar-Fontana LI, Semichon M, Tybulewicz VL, Bismuth G, Trautmann A, Germain RN, Delon J. Nat Immunol 2004;5:272–9. [PubMed: 14758359]
42. Raftopoulou M, Hall A. Dev Biol 2004;265:23–32. [PubMed: 14697350]
43. Pollard TD, Borisy GG. Cell 2003;112:453–65. [PubMed: 12600310]
44. Lee JH, Katakai T, Hara T, Gonda H, Sugai M, Shimizu A. J Cell Biol 2004;167:327–37. [PubMed: 15504914]
45. Lehmann R. Curr Opin Genet Dev 2001;11:457–63. [PubMed: 11448633]
46. Calderwood DA, Zent R, Grant R, Rees DJ, Hynes RO, Ginsberg MH. J Biol Chem 1999;274:28071–4. [PubMed: 10497155]
47. Hemmings L, et al. J Cell Sci 1996;109(Pt 11):2715–26. [PubMed: 8937989]
48. Critchley DR. Biochem Soc Trans 2005;33:1308–12. [PubMed: 16246105]
49. Shamri R, et al. Nat Immunol 2005;6:497–506. [PubMed: 15834409]
50. Smith A, Carrasco YR, Stanley P, Kieffer N, Batista FD, Hogg N. J Cell Biol 2005;170:141–51. [PubMed: 15983060]
51. Simonson WT, Franco SJ, Huttenlocher A. J Immunol 2006;177:7707–14. [PubMed: 17114441]
52. Geiger, B. Guidebook to the Cytoskeletal and Motor Proteins. Kreis, T.; Vale, R., editors. Oxford: Oxford University Press; 1999. p. 172-175.
53. Chong LD, Traynor-Kaplan A, Bokoch GM, Schwartz MA. Cell 1994;79:507–13. [PubMed: 7954816]
54. Martel V, Racaud-Sultan C, Dupe S, Marie C, Paulhe F, Galmiche A, Block MR, Albiges-Rizo C. J Biol Chem 2001;276:21217–27. [PubMed: 11279249]
55. Burridge K, Chrzanowska-Wodnicka M. Annu Rev Cell Dev Biol 1996;12:463–518. [PubMed: 8970735]
56. Johnson RP, Craig SW. Nature 1995;373:261–4. [PubMed: 7816144]
57. Gilmore AP, Burridge K. Nature 1996;381:531–5. [PubMed: 8632828]
58. Demali KA. Trends Biochem Sci 2004;29:565–7. [PubMed: 15501673]
59. Janmey PA, Stossel TP. Nature 1987;325:362–4. [PubMed: 3027569]
60. Janmey PA, Matsudaira PT. J Biol Chem 1988;263:16738–43. [PubMed: 2846546]

NIH-PA Author Manuscript NIH-PA Author Manuscript NIH-PA Author Manuscript

61. Sakurai T, Kurokawa H, Nonomura Y. J Biol Chem 1991;266:4581–4581. [PubMed: 1847925]
62. Hartwig JH, Bokoch GM, Carpenter CL, Janmey PA, Taylor LA, Toker A, Stossel TP. Cell 1995;82:643–53. [PubMed: 7664343]
63. Feng L, Mejillano M, Yin HL, Chen J, Prestwich GD. Biochemistry 2001;40:904–13. [PubMed: 11170411]
64. Xian W, Janmey PA. J Mol Biol 2002;322:755–71. [PubMed: 12270712]
65. Gambhir A, Hangyas-Mihalyne G, Zaitseva I, Cafiso DS, Wang J, Murray D, Pentyala SN, Smith SO, McLaughlin S. Biophys J 2004;86:2188–207. [PubMed: 15041659]
66. McLaughlin S, Hangyas-Mihalyne G, Zaitseva I, Golebiewska U. Biochem Soc Symp 2005:189–98. [PubMed: 15649142]
67. Aderem A. Cell 1992;71:713–6. [PubMed: 1423627]
68. Kim YS, Hong KS, Seong YS, Park JB, Kuroda S, Kishi K, Kaibuchi K, Takai Y. Biochem Biophys Res Commun 1994;202:1163–8. [PubMed: 7519421]
69. Arbuzova A, Murray D, McLaughlin S. Biochim Biophys Acta 1998;1376:369–79. [PubMed: 9804991]
70. Ohmori S, Sakai N, Shirai Y, Yamamoto H, Miyamoto E, Shimizu N, Saito N. J Biol Chem 2000;275:26449–57. [PubMed: 10840037]
71. Nicolau DV Jr, Burrage K, Parton RG, Hancock JF. Mol Cell Biol 2006;26:313–23. [PubMed: 16354701]
72. Rodgers W, Farris D, Mishra S. Trends Immunol 2005;26:97–103. [PubMed: 15668125]
73. Chichili GR, Rodgers W. J Biol Chem 2007;282:36682–91. [PubMed: 17947241]
74. Heuvingh J, Franco M, Chavrier P, Sykes C. Proc Natl Acad Sci U S A 2007;104:16928–33. [PubMed: 17942688]
75. Koreh K, Monaco ME. J Biol Chem 1986;261:88–91. [PubMed: 3001064]
76. Hope HR, Pike LJ. Mol Biol Cell 1996;7:843–51. [PubMed: 8816992]
77. Pike LJ, Casey L. J Biol Chem 1996;271:26453–6. [PubMed: 8900109]
78. Pike LJ, Miller JM. J Biol Chem 1998;273:22298–304. [PubMed: 9712847]
79. Waugh MG, Lawson D, Tan SK, Hsuan JJ. J Biol Chem 1998;273:17115–21. [PubMed: 9642278]
80. Hur EM, Park YS, Lee BD, Jang IH, Kim HS, Kim TD, Suh PG, Ryu SH, Kim KT. J Biol Chem 2004;279:5852–60. [PubMed: 14630916]
81. Heerklotz H. Biophys J 2002;83:2693–701. [PubMed: 12414701]
82. Heerklotz H, Szadkowska H, Anderson T, Seelig J. J Mol Biol 2003;329:793–9. [PubMed: 12787678]
83. Johnson CM, Chichili GR, Rodgers W. J Biol Chem. 2008in press
84. Tong J, Nguyen L, Vidal A, Simon SA, Skene JH, McIntosh TJ. Biophys J 2008;94:125–33. [PubMed: 17827240]
85. Toker A. Curr Opin Cell Biol 1998;10:254–61. [PubMed: 9561850]
86. Rozelle AL, et al. Curr Biol 2000;10:311–20. [PubMed: 10744973]
87. Ward ME, Wu JY, Rao Y. Proc Natl Acad Sci U S A 2004;101:970–4. [PubMed: 14732696]
88. Doughman RL, Firestone AJ, Wojtasiak ML, Bunce MW, Anderson RA. J Biol Chem 2003;278:23036–45. [PubMed: 12682053]
89. Ling K, Doughman RL, Firestone AJ, Bunce MW, Anderson RA. Nature 2002;420:89–93. [PubMed: 12422220]
90. Coppolino MG, et al. J Biol Chem 2002;277:43849–57. [PubMed: 12223494]
91. Boronenkov IV, Anderson RA. J Biol Chem 1995;270:2881–4. [PubMed: 7852364]
92. Divecha N, Irvine RF. Cell 1995;80:269–78. [PubMed: 7834746]
93. Castellino AM, Parker GJ, Boronenkov IV, Anderson RA, Chao MV. J Biol Chem 1997;272:5861–70. [PubMed: 9038203]
94. Itoh T, Ijuin T, Takenawa T. J Biol Chem 1998;273:20292–9. [PubMed: 9685379]
95. Santarius M, Lee CH, Anderson RA. Biochem J 2006;398:1–13. [PubMed: 16856876]
96. Doughman RL, Firestone AJ, Anderson RA. J Membr Biol 2003;194:77–89. [PubMed: 14502432]

NIH-PA Author Manuscript

NIH-PA Author Manuscript

NIH-PA Author Manuscript

97. Shibasaki Y, Ishihara H, Kizuki N, Asano T, Oka Y, Yazaki Y. J Biol Chem 1997;272:7578–81. [PubMed: 9065410]

98. Honda A, et al. Cell 1999;99:521–32. [PubMed: 10589680]

NIH-PA Author Manuscript

NIH-PA Author Manuscript

NIH-PA Author Manuscript

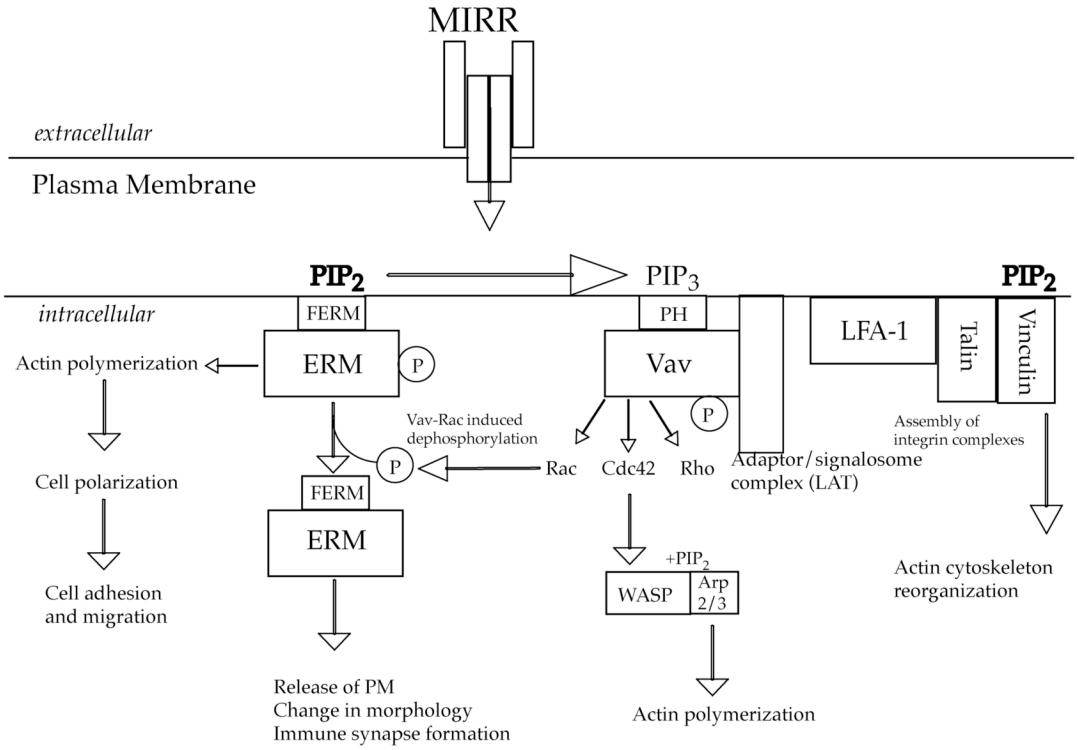

Figure 1. PIP_2-dependent T cell signaling pathways for regulation of the actin cytoskeleton

Actin polymerization and reorganization of the actin cytoskeleton occurs upon triggering of multichain immune recognition receptors (MIRRs). The transduced signals activate intracellular signaling pathways, which are modulated by local PIP_2 and PIP_3 levels. Three PIP_2-dependent pathways for regulation of the actin cytoskeleton are shown here. ERM proteins are membrane-microfilament linkers which when activated (membrane-bound to PIP_2 by FERM domain), function in cell adhesion, migration, and morphology. When ERM proteins are deactivated (cytosolic), they allow morphology changes and formation of a mature immune synapse. Vav is localized to the membrane via its PH domain binding to PIP_2 and PIP_3, and through association with membrane-associated adaptor molecules such as the LAT-associated signalosome in T cells. Vav is an exchange factor for Rho GTPases (Rac, Cdc42), which regulate actin polymerization through different pathways. One important pathway is by activating WASP, which nucleates actin via the Arp 2/3 complex. The integrin LFA-1 is activated by "inside-out" signaling. Abbreviations are: TCR, T cell receptor; PIP_2, phosphatidylinositol 4,5-bisphosphate; PIP_3, phosphatidylinositol 3,4,5-trisphosphate; PH, pleckstrin homology; ERM, ezrin-radixin-moesin; FERM, band 4.1, ezrin, radixin, moesin; WASP, Wiskott-Aldrich syndrome protein; LAT, linker of activated T cells.

NIH-PA Author Manuscript

NIH-PA Author Manuscript

NIH-PA Author Manuscript

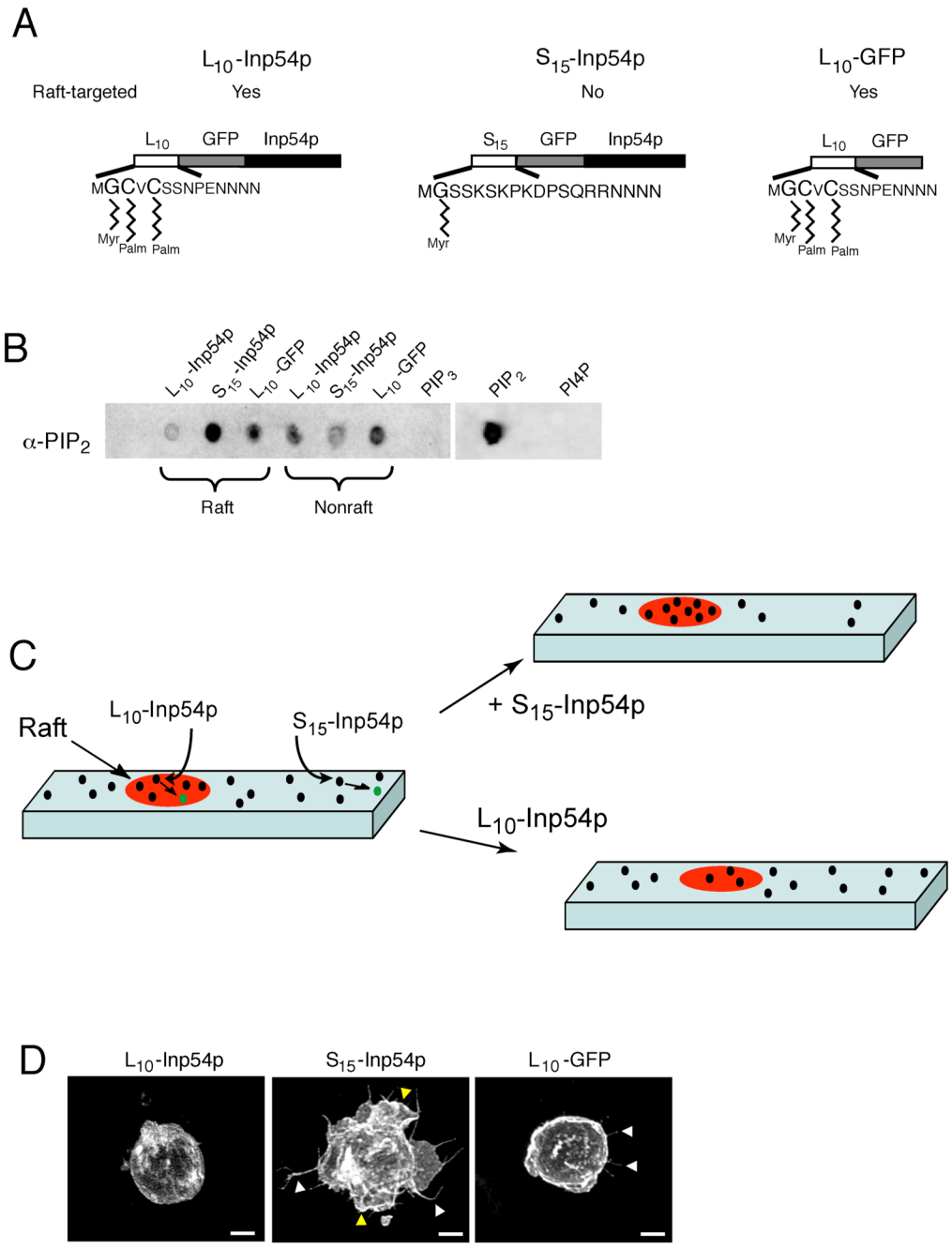

Figure 2. Alteration of plasma membrane PIP_2 pools by targeted PIP_2-specific phosphatase Inp54p

(A) The PIP_2-specific phosphatase Inp54p was targeted to the plasma membrane using separate minimal membrane-anchoring signals. L_{10} consists of the first 10 amino acids of Lck, and this sequence targeted Inp54p to membrane rafts. S_{15} contains the first 15 amino acids of Src, and it restricts proteins to the nonraft fraction. To detected transfected cells, each construct contained GFP. A separate control peptide contained the L_{10} sequence and GFP without the Inp54p. **(B)** Immunoblots of total lipids extracted from with either the raft or nonraft pools of transfected cells. The antibody was specific to PIP_2. The blot shows that expression of the L_{10}-Inp54p resulted in a reduction in the raft-associated pool of PIP_2. Expression of the S_{15}-Inp54p caused a decrease in the nonraft PIP_2 levels, and a corresponding increase of the

NIH-PA Author Manuscript

NIH-PA Author Manuscript

NIH-PA Author Manuscript

PIP_2 in membrane rafts. The properties of the targeted Inp54p molecules and the results from their expression are summarized in **(C). (D)** Expression of the L_{10}-Inp54p and S_{15}- Inp54p caused distinct changes in cell phenotype, including altering cell morphology in transfected T cells Compared to the control, the S_{15}-Inp54p increased membrane ruffling and formation of cell filopodia (arrowheads). In contrast, the L_{10}-Inp54p resulted in smooth cells that were void of ruffles and filopodia. Each image is a three-dimensional projection image of GFP fluorescence generated from confocal image stacks of transfected Jurkat T cells. White bars represent 5 μm.

NIH-PA Author Manuscript

NIH-PA Author Manuscript

NIH-PA Author Manuscript

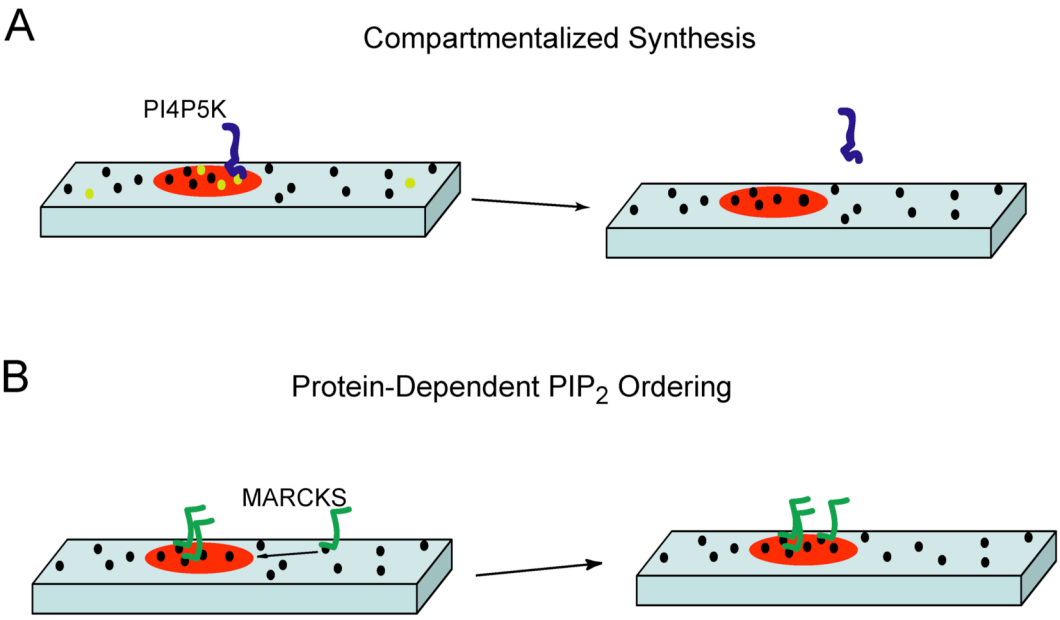

Figure 3. Mechanisms for membrane compartmentalization of PIP_2

(A) Compartmentalized synthesis of PIP_2 in membrane rafts by PI4P5K. **(B)** Partitioning of protein-bound PIP_2 to membrane rafts. The yellow spheres represent phosphatidyl 4-inositol, the black represent PIP_2.

NIH-PA Author Manuscript

NIH-PA Author Manuscript

NIH-PA Author Manuscript

Table 1

PIP_2-regulated actin proteins in immune cells.

Protein	Domain	Function
Vav	PH	Actin polymerization/membrane-actin interactions
WASP	PH	Actin nucleation
ERM	FERM	Membrane-cytoskeleton linkers
Talin	FERM	Membrane cytoskeleton linker
Vinculin	D5	Binding cytoskeletal proteins
Gelsolin	P1 and P2	Inhibition of actin severing
MARCKS	Effector Domain	PIP_2 sequestering/PKC substrate